EXEMPLOS - AULA 36

1.

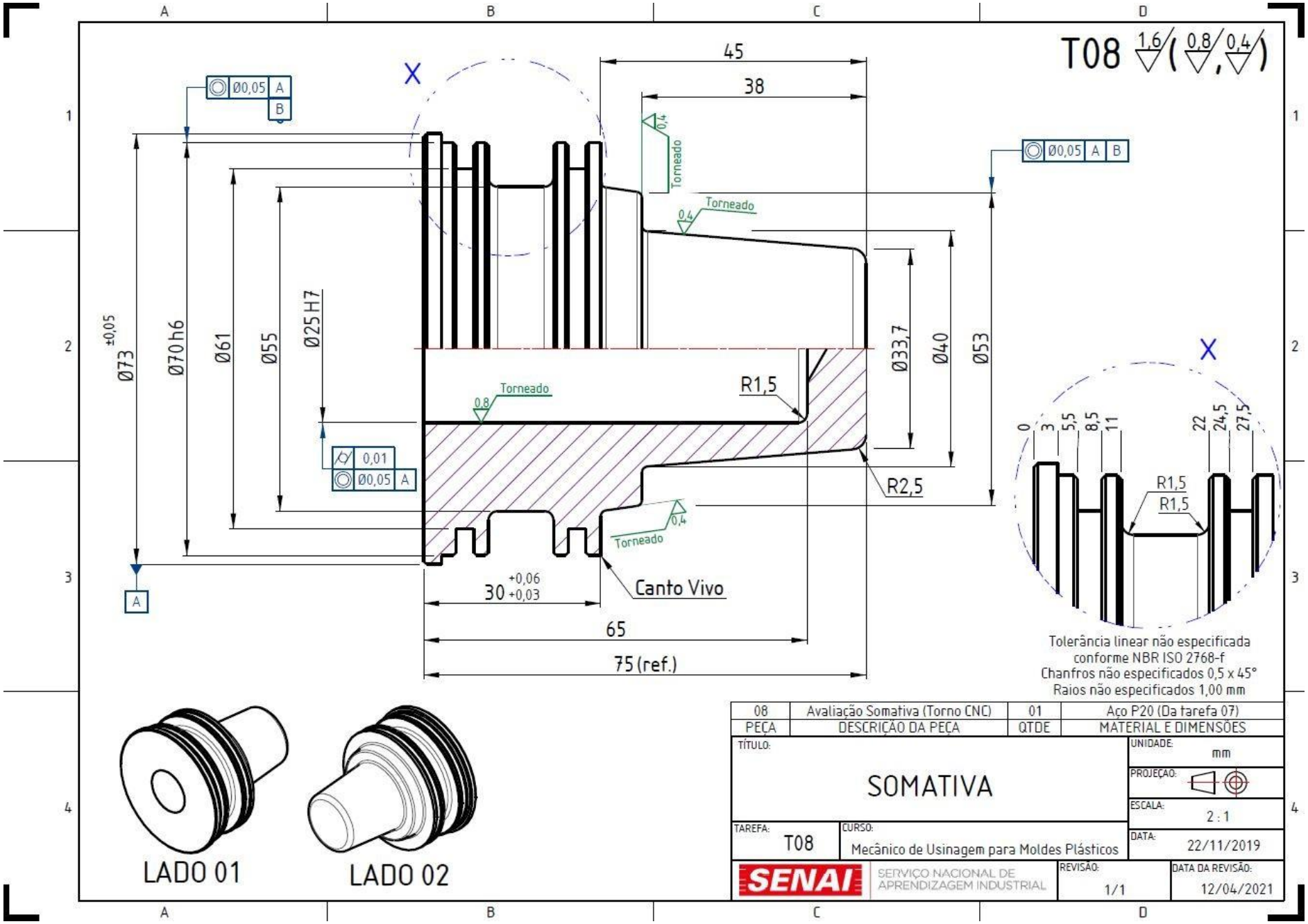

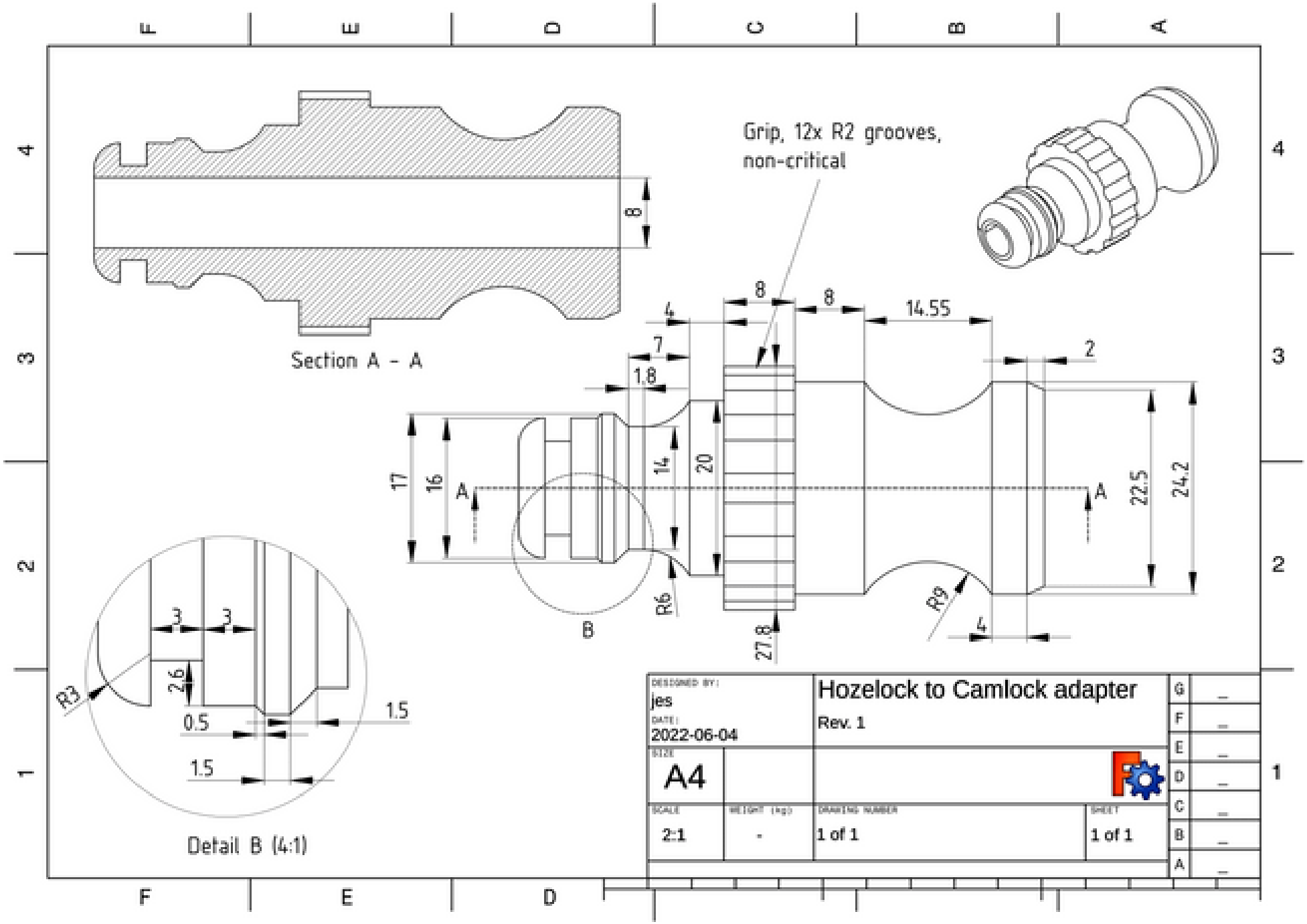
Section A - A
8
Grip, 12x R2 grooves,
non-critical
8
8
14.55
4
7
1.8
2
17
16
14
20
A
A
22.5
24.2
R6
B
27.8
R9
4
3
3
2.6
R3
0.5
1.5
1.5
Detail B (4:1)
DESIGNED BY:
jes
DATE:
2022-06-04
Hozelock to Camlock adapter
Rev. 1
SIZE
A4
SCALE
2:1
WEIGHT (kg)
-
DRAWING NUMBER
1 of 1
SHEET
1 of 1

2.